Shenzhen Hiwonder Technology Co,Ltd

Hiwonder Jetson Nano Development Tutorial V1.0

1. Getting Ready

1.1 Wiring Instruction

This section uses DuPont wire to connect the touch sensor as an example. The diagram of the wiring method is as follows:

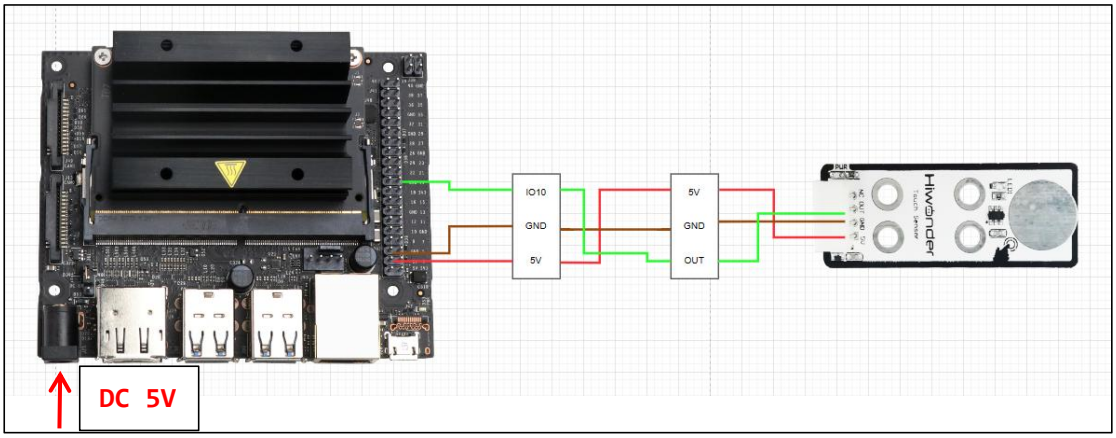

Note: Before powering on, please ensure no metal objects come into contact with the master. This action prevents the pins at the bottom of the master from a short circuit, which may cause damage to the master.

1.2 Environment Configuration

To install NoMachine on your PC, you can access the software package in “2. Software Tools&Program Collections->01 Software Installation Packages-> Remote Desktop Connection Tool”. For detailed instructions on how to use NoMachine, please refer to the corresponding directory.

Drag the program into the Jetson Nano system mirror image. Take placing it on the desktop as an example.

2. Case Test

This case uses the Jetson system’s terminal window to display the detecting status of the touch sensor.

(1) Open the terminal, and input the command “cd Desktop/” to switch to the directory where the program is. Press “Enter”.

```
cd Desktop/
```

(2) Enter the command “python3 touch_sensor.py” to execute this case program.

```
~/Desktop
python3 touch_sensor.py
```

2.2 Program Outcome

Use the touch sensor to test the touch state. When you do not touch the metal surface and the sensor does not detect any touch, the terminal window displays “1”. When you touch the metal surface with your finger, the sensor detects the touch and its LED1 lights up, and the terminal window displays “0”.

```
OUT: 1
OUT: 1
OUT: 1
OUT: 1
OUT: 1
OUT: 1
OUT: 1
OUT: 0
OUT: 0
OUT: 0
OUT: 0
OUT: 0
OUT: 0
OUT: 0
OUT: 1
OUT: 0
OUT: 0
```

2.3 Brief Program Analysis

- **Import the Library File**

```
import Jetson.GPIO as GPIO
import time
```

Import the necessary library files for the program, including libraries required for the delay, and libraries of the GPIO on the Jetson Nano.

- **Initialization Operation**

```
#Initialize IO port
GPIO.setmode(GPIO.BCM)
GPIO.setup(10, GPIO.IN)
```

Initialize GPIO port to set GPIO mode to BCM mode. Set GPIO pin10 used on the touch sensor to input mode.

- **Main Function**

```
while True:
    state = GPIO.input(10)
    print("OUT:",state)      #Print IO port information
    time.sleep(0.5)      #Refresh button status once every 500ms
```

In the “while” loop, assign the data obtained from GPIO pin10 to the “state” variable. Then, print the variables stored in the “state”. Set the program to refresh every 0.5 seconds and loop executing this process.